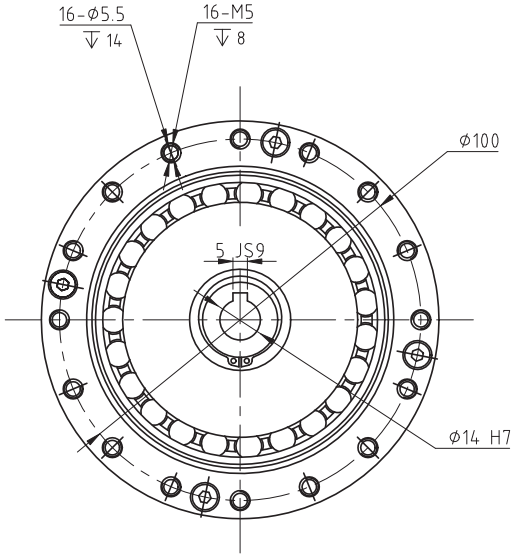

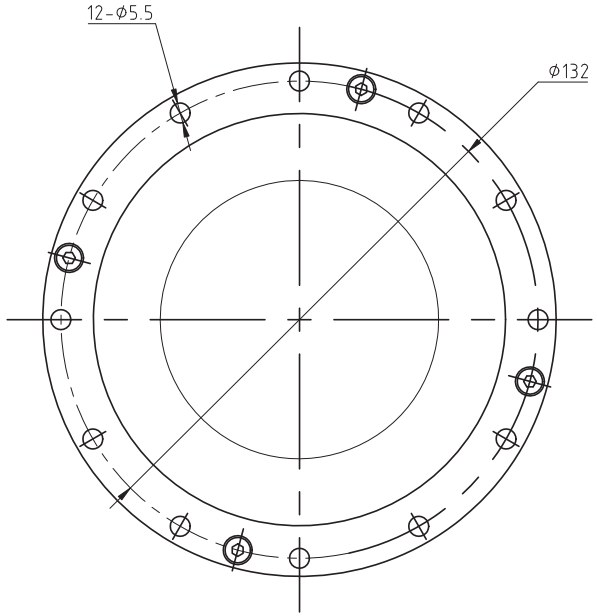

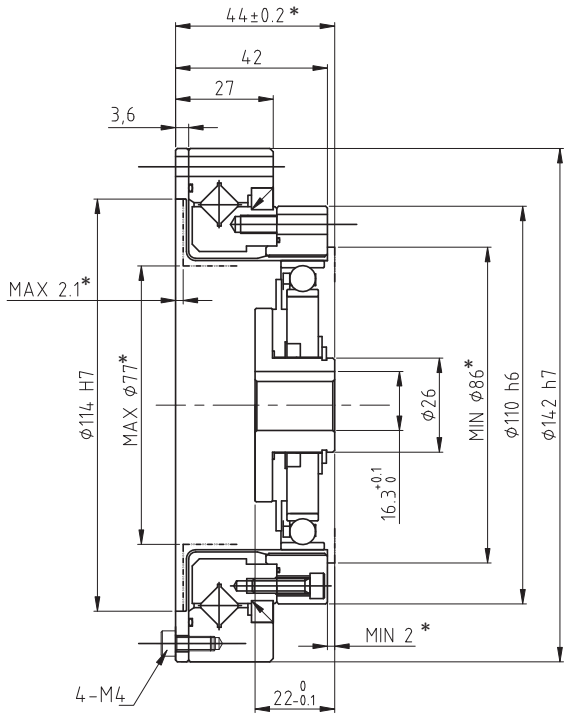

Laifual Drive

LHT-32-XX-U-II

Technical Requirements:

1.Please use the grease specified by our company (LF-2 or F-3).
2.The * in the drawing is the installation reference size, please follow the installation size requirements.
3.For details of size, please confirm with the delivery specification drawings.

Model	Reduction ratio	Rated torque at 2000r/min input		Permissible peak torque at start and stop		Permissible maximum value for average load		Permissible maximum momentary torque		Permissible maximum input rotational speed (Grease)	Permissible average input rotational speed (Greaae)	Backlash	weight	Desian life
		Nm	kgfm	Nm	kgfm	Nm	kgfm	Nm	kgfm	r/min	r/min	Arc Sec	kg	Hour
32	50	76	7.8	216	22	108	11	382	39	4800	3500	⩽20	LHT-II:2.54	10000
	80	118	12	304	31	167	17	568	58					15000
	100	137	14	333	34	216	22	647	66					15000
	120	137	14	353	36	216	22	686	70					15000